N.Y.S.D.O.T. – CB/DI MANHOLE – CATCH BASIN PER N.Y.S.D.O.T. 706–04

TOP SLAB IS STEEL REINFORCED TO MEET OR EXCEED HS–20 LOADING.

PROJECT:_____

STRUCTURE:_____

ITEM NO.:_____

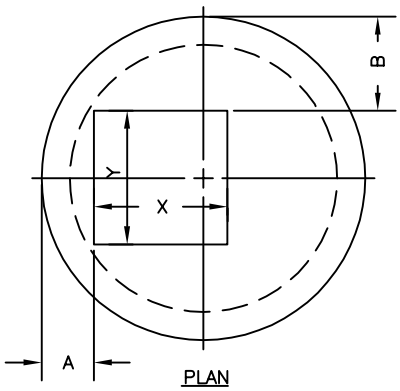

PLAN
(SQUARE OPENING)

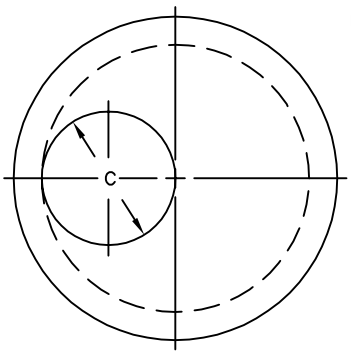

PLAN
(ROUND OPENING)

NOTE:
STEEL REINFORCED COPOLYMER POLYPROPYLENE PLASTIC STEP CONFORMS TO LATEST A.S.T.M. C478 PARA.11 SPEC. REQUIRED ≥ 4'(1219.2mm.) DEPTH MEETS – 725–02

☐ BUTYL SEALANT IN ADDITION

A ☒	POLYPROPYLENE STEP	PS2–PF	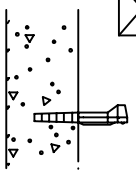
B ☒	SECTION JOINT	BUTYL RUBBER	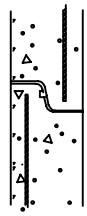
C1 ☐	PIPE TO MANHOLE CONNECTIONS	* KNOCKOUT PIPE TO FIT	PIPE SIZE: 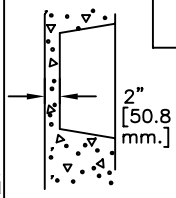 2" [50.8 mm.]
C2 ☐	PIPE TO MANHOLE CONNECTIONS	* HOLE PIPE TO FIT	PIPE SIZE:

X:_____

Y:_____

A:_____

B:_____

C:_____

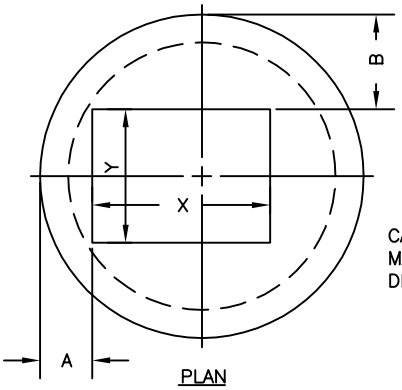

PLAN
(RECTANGULAR OPENING)

OPENING DIAMETER:
- ☐ 24"(609.6mm.)ø
- ☐ 32"(812.8mm.)ø
- ☐ 36"(914.4mm.)ø

CATCH BASIN MANHOLE DIAMETER:

	WALL	BASE
☐ 4' DIA. (1219.2mm.)	5" (127.0mm.)	8" (203.2mm.)
☐ 5' DIA. (1524.0mm.)	6" (152.4mm.)	8" (203.2mm.)
☐ 6' DIA. (1828.8mm.)	7" (177.8mm.)	8" (203.2mm.)
☐ 8' DIA.* (2438.4mm.)	9" (228.6mm.)	14" (355.6mm.)
☐ 10' DIA.* (3048.0mm.)	10" (254.0mm.)	14" (355.6mm.)

* = VARIES PER DIA. USED.

SEE SECTION 14 FOR PIECE DETAILS FOR EACH DIAMETER.

* MIN. 2"(50.8mm.), MAX. 3"(76.2mm.) BETWEEN OUTSIDE PIPE & OPENING.

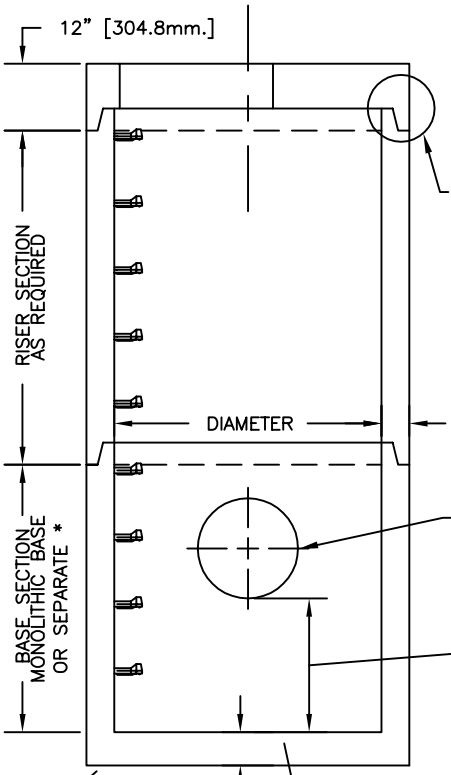

PIPE TO MH. CONN. DET. C1,C2 (SIZE TO SUIT)

- ☐ 6" SUMP (152.4mm.)
- ☐ 12" SUMP (304.8mm.)
- ☐ 24" SUMP (609.6mm.)
- ☐ ____" SUMP ____ mm.

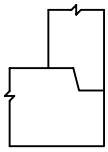

** 8'(2438.4mm.) & 10'(3048.0mm.) DIA. SEPARATE BASE.

☐ STANDARD BASE

☒ 8"(203.2mm.) THICK. BASE SLAB

GENERAL NOTES:
1. REINFORCED STEEL CONFORMS TO LATEST A.S.T.M. A185 SPEC. ** SQ. IN./LINEAR FT. AND ** SQ. IN. (BOTH WAYS) IN BASE SLAB.
2. CONCRETE COMPRESSIVE STRENGTH – 4000 P.S.I. MINIMUM.
3. MANHOLE DESIGN SPECIFICATIONS CONFORM TO LATEST A.S.T.M. C478 SPEC. FOR "PRECAST REINFORCED CONCRETE MANHOLE SECTIONS."
4. SINGLE POUR MONOLITHIC BASE SECTION. ** 8'(2438.4mm.) & 10'(3048.0mm.) DIA. SEPARATE BASE.

©
SPECIFICATIONS ARE SUBJECT TO CHANGE WITHOUT NOTICE.