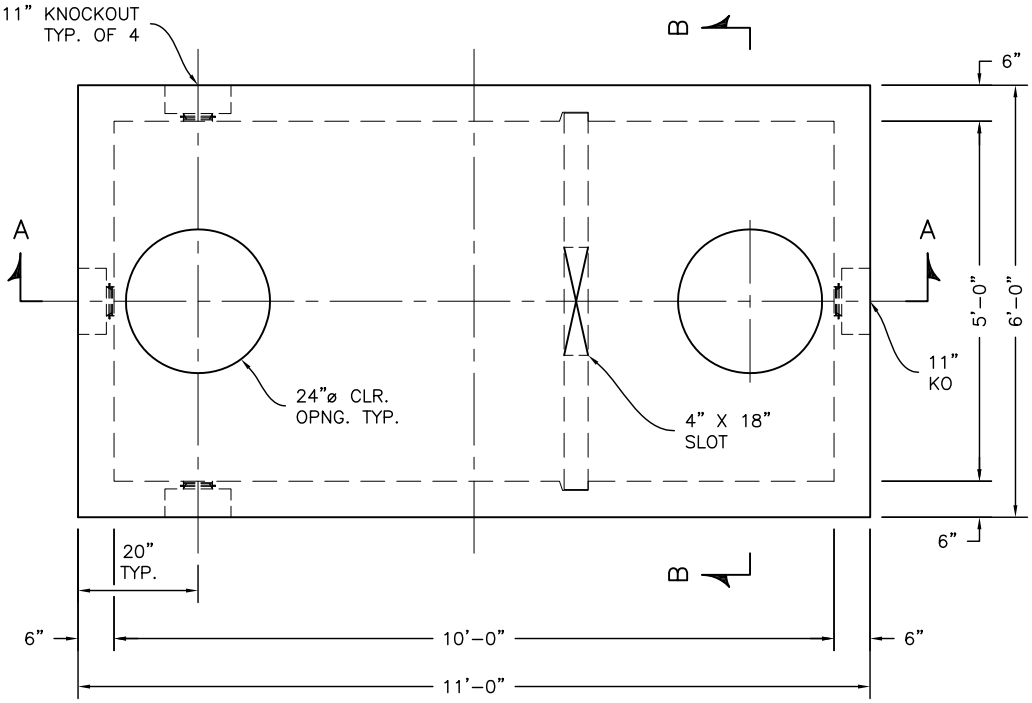

PLAN

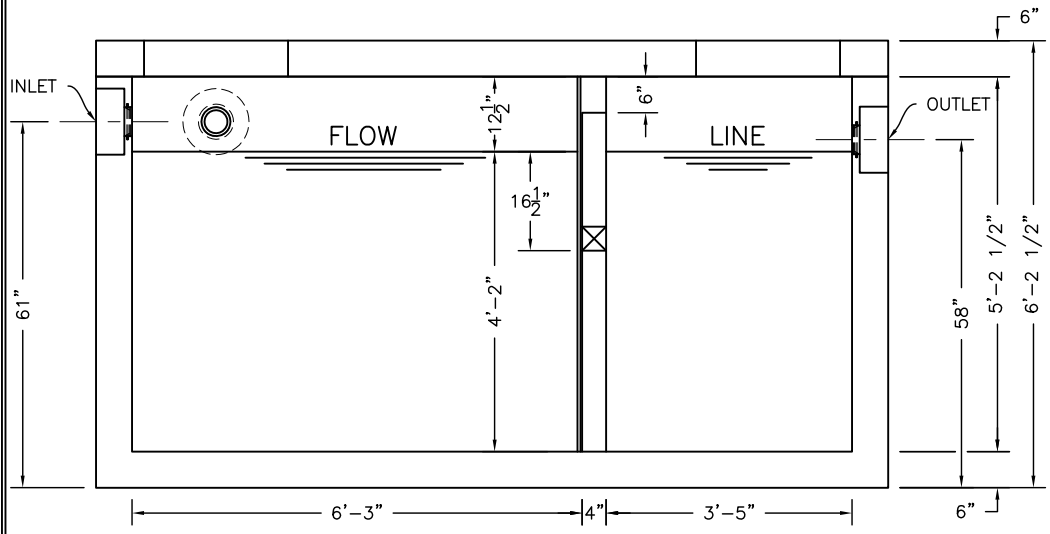

SECTION A–A

SP-7A

SPECIFICATIONS:

CONCRETE:	6,500 P.S.I. @ 28 DAYS.
ENTRAINED AIR:	5% – 8%.
STEEL:	A.S.T.M. A496–A615 GRADE 60–80 KSI.
DESIGN LOADING:	ACI 318–99 TRAFFIC. USE ACI LOAD FACTORS. A.A.S.H.T.O. METHOD OF DESIGN. EQUIVALENT SOIL PRESSURE OF 40 (PCF).
LIVE LOAD:	H20.
EARTH FILL:	0 TO 6'.
WATER TABLE:	3' BELOW GRADE.

WEIGHT:

TOP SLAB:	4,423 LBS.
BOTTOM SECTION & BAFFLE WALL:	18,197 LBS.
TOTAL:	22,620 LBS.

BAFFLE: 4" BY KISTNER. LARGER BY CONTRACTOR.

WATERTIGHT ASSEMBLY IS THE RESPONSIBILITY OF THE INSTALLING CONTRACTOR. ASK FOR KISTNER "WATERTIGHT JOINT INSTALLATION" DETAIL.

PIPE OPENINGS STOCK:

- ☐ PIPE SEALS REQUIRED
  - ☐ 4" PVC – OPENING WITH SEAL – STOCK
  - ☐ 6" PVC – OPENING STOCK – SEAL TO BE INSTALLED
  - ☐ 8" PVC – OPENING STOCK – SEAL TO BE INSTALLED
- ☐ GROUTED OPENINGS ONLY – REQUIRED
  - ☐ 4" PVC – OPENING WITH SEAL – STOCK
  - ☐ 6" PVC – STOCK KNOCKOUT TO BE BROKEN OUT BY CONTRACTOR
  - ☐ 8" PVC – STOCK KNOCKOUT TO BE BROKEN OUT BY CONTRACTOR

FOR RISER, FRAME, AND COVER: SEE "TRAFFIC TANK EXTENSIONS"

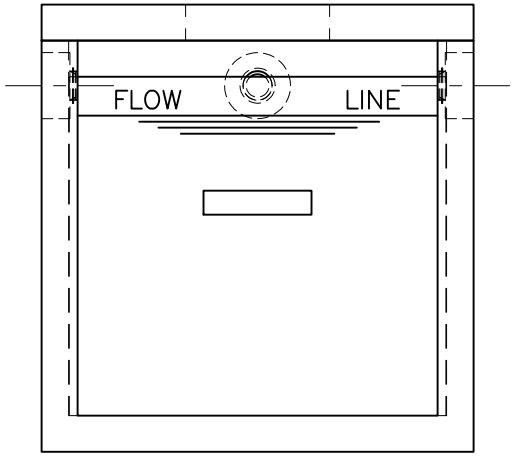

SECTION B–B

KISTNER CONCRETE PRODUCTS INC.
8713 READ ROAD
E. PEMBROKE, N.Y.
14056
(716) 894–2267

PRODUCT DESIGNATION

1500 GALLON SEPTIC TANK
TRAFFIC - NEW

DWG. NO.

ST-1500-T-N-0 ©

12/13/16

O:\Drawings\Product Workbooks\024-SquareRectangular-05x10-60X120\Septic-Grease-Oil-Holding-Pump-StormPro\ST-5X10-T-N-0.dwg